hazemeyer

locaste

User manual
Project : 14V 110A Power Supplies
Reference : 131968
Version : A0

Contents

I) Introduction 4
A) Generalities 4
B) Utilization examples 5
C) Electrical characteristics 6
D) Mechanical characteristics 7
II) Interface 8
A) Customer 8
B) Converter 10
III) Connection in local mode via USB 11
A) Material 11
B) Preparation 11
C) Use of commands 11
D) Information reading 11
E) Adjustment of the information on the project 12
F) Adjustment on the Ethernet 12
G) Faults configuration 12
IV) Regulation adjustment 14
A) Regulation loop choice 15
B) Adjustment of the regulation loop parameters 17
C) Adjustment of the EXT regulation loop parameters 17
D) Adjustment of the LSB value 18
E) Adjustment of the EXT LSB value 18
F) Adjustment of gains and offsets 19
G) Adjustment of the information trip setpoints 19
H) Ramp adjustment 19
I) Ratios adjustment 20
J) Current and voltage orders modification 20
V) Modbus 21
VI) Profibus 21
VII) Utilization 22
A) Faults resetting 22
B) Starting the converter 22
C) Stopping the converter 22
D) Order adjustment 22
E) Validation of the order 22
F) Visualization of the order 23
VIII) Appendix 24
A) List of commands 24
B) Initial configuration 25
IX) Connectors 26
B) Iocaste composition 30
C) Profibus exchange table 31
D) Modbus exchange table 33

Figures list

Figure I-1: Iocaste architecture 4
Figure I-2: Buck converter control using an Iocaste 5
Figure I-3: Half bridge converter control using an Iocaste 5
Figure I-4: IGBT bridge converter control using an Iocaste 5
Figure I-5: Thyristor bridge converter control using an Iocaste 5
Figure I-6: Iocaste mechanical drawing 7
Figure II-1 : Iocaste front face 8
Figure II-2: left screen 8
Figure II-3: right screen: Status 8
Figure II-4: right screen: Défauts 8
Figure II-5: right screen: Profibus / Ethernet adjustments 8
Figure II-6: Iocaste front face buttons and leds 9
Figure II-7: Iocaste rear face 10
Figure IV-1: Regulation scheme 14
Figure IV-2: Closed interlinked loop regulation scheme 15
Figure IV-3: Current closed loop regulation scheme 15
Figure IV-4: Current open loop regulation scheme 16
Figure IV-5: Voltage closed loop regulation scheme 16
Figure IV-6: Voltage open loop regulation scheme 16

Tables list

Table III-1: Information commands 11
Table III-2: Commands for project information adjustments 12
Table III-3: Commands for project information adjustments 12
Table IV-1: Command for choice of the regulation loop 15
Table IV-2: Loop adjustment parameters commands 17
Table IV-2: EXT Loop adjustment parameters commands 17
Table IV-3: LSB value adjustment command 18
Table IV-4: Offsets and gains adjsutment commands of the regulation card 19
Table IV-5: Trip information set points adjustment commands. 19
Table IV-6: Current ramp value adjustment command 19
Table IV-7: Ratio adjustment comand 20
Table IV-8: Current and voltages settings modification command 20
Table V-1: Modbus Codes and fonctions and their compatiblities with the Iocaste 21
Table VIII-1: First part of available commands in local mode 24
Table VIII-2: Second part of available commands in local mode 25

I) Introduction

A) Generalities

The Iocaste drawer is a control unit ensuring control automatism, managing different modes of communication and allowing digital control with a resolution of about 5 ppm.
The Iocaste is a part of the converters made by Hazemeyer, and appears in the shape of a 1U drawer. Using the Iocaste, converters can be locally and remotely controlled:

- in local mode, using front panel buttons or via a computer
- in remote mode, using different protocols such as Modbus or TCP/IP Modbus.

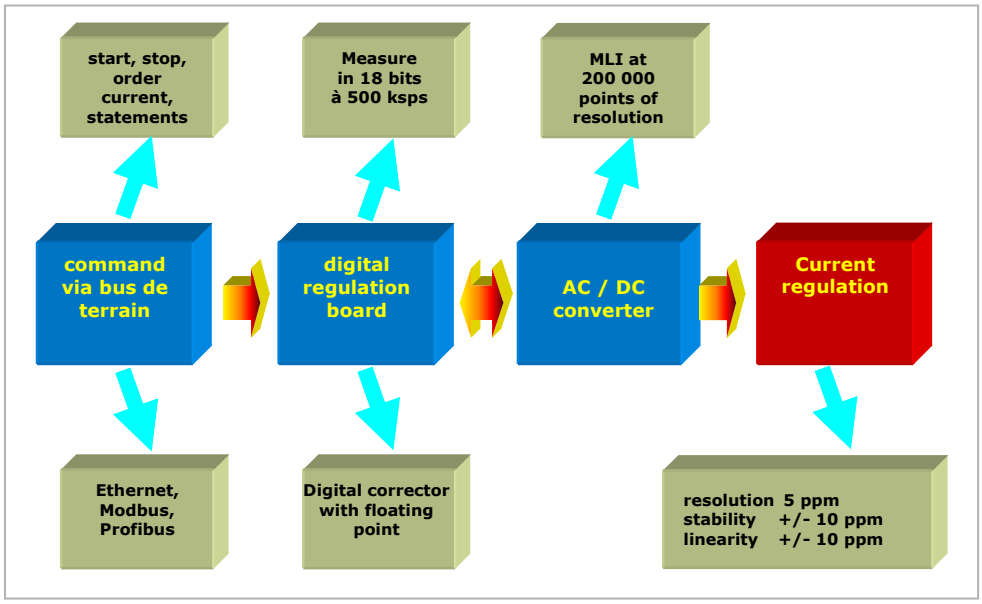

Figure I-1: Iocaste architecture

B) Utilization examples

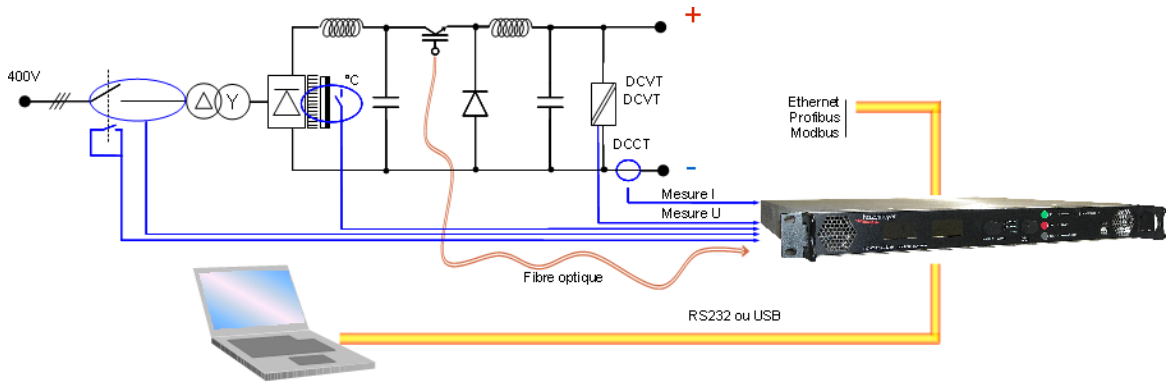

Figure I-2: Buck converter control using an Iocaste

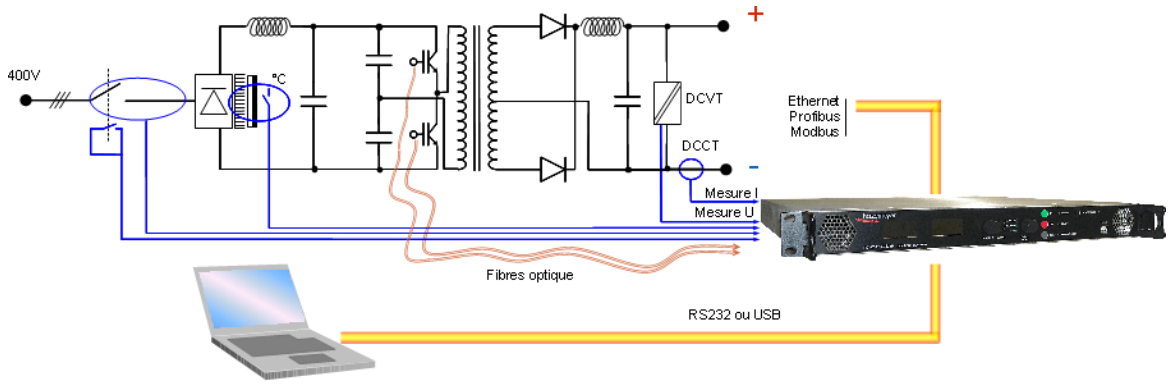

Figure I-3: Half bridge converter control using an Iocaste

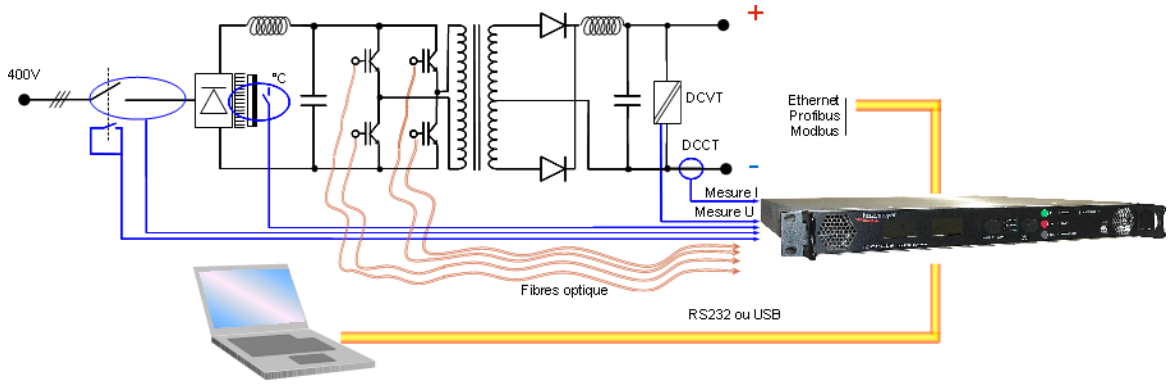

Figure I-4: IGBT bridge converter control using an Iocaste

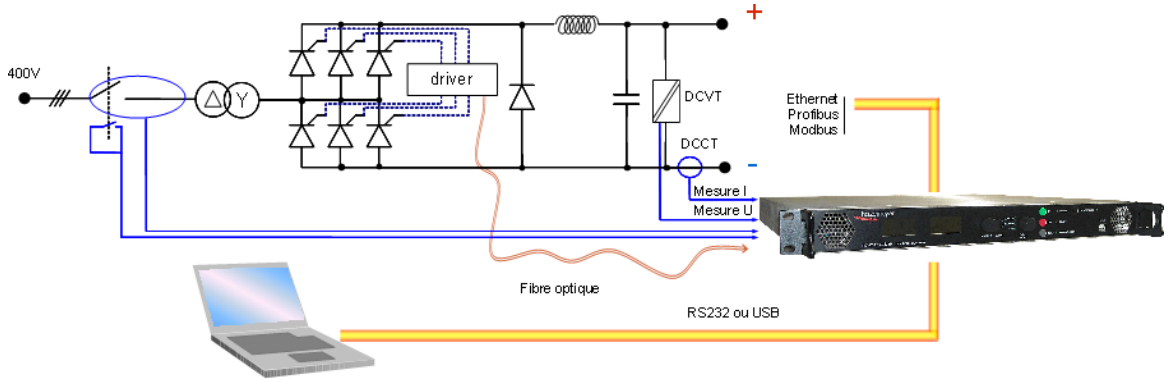

Figure I-5: Thyristor bridge converter control using an Iocaste

C) Electrical characteristics

Alimentation	±15 → ± 24 Vdc
Consommation	30 W (hors capteur de courant)
Dimensions	500 x 440 x 44,5 mm (chassis 1U)
Environnement	0° → 40° C
Affichage	2 x 1,6'' matrice 128 x 64 px
Communication locale	USB
Connecteur E/S	Verrouillable par Sub-d / BNC / LEMO
	suivant les entrées / sorties
Entrées analogiques	3 entrées 18 Bits – 1 Msps
haute résolution	2 x filtres d'entrée
	Entrée 0 / 10 V différentielle
	Stabilité à long terme ± 10 ppm
	Résolution : < 5 ppm
	Reproductibilité : 5 ppm
Entrées analogiques	4 entrées 16 Bits – 10 ksps
bipolaires	1 x filtre d'entrée
	Entrée ± 10 V différentielle
	INL ±3 LSB
	Entrées analogique supplémentaire
Entrées ToR	16 entrées
Alarme / défaut	0 → + 15 V / 0 → + 24V
	Alarme / défaut en logique cablée
	Opto. isolées < 2.5 kV
Entrées ToR	8 entrées 0 → + 15 V / 0 → + 24V
disponibles	Consommation < 2 mA
	Opto-isolées à 2.5 kV
Sorties sur relais	8 sorties - contact 1 A
	Tension admissible 200 V
	Résistance de contact 150 mΩ
	Puissance de commutation 15 W
Communication	Profibus - DP RS422 / RS485
	Modbus – maître / esclave RS 422 / 485
	Ethernet Modbus TCP / IP esclave
M L I	4 sorties par fibre optique
	Structure compatible : buck / 1/2 pont / pont H
	Fréquence d'impulsion : 600 → 100 kHz
	Résolution : 150 ps
Entrée fibre optique	2 x récepteur 1 Mb/s à sécurité positive
Equipement	Carte régulation numérique 18 bits temps réel
	ou carte régulation analogique traditionnelle
	2 emplacements disponibles sur mesure
	entrées / sorties
	sorties analogiques ± 10V
	relecture consignes / mesures
	outils de communication
	autre équipement à la demande

D) Mechanical characteristics

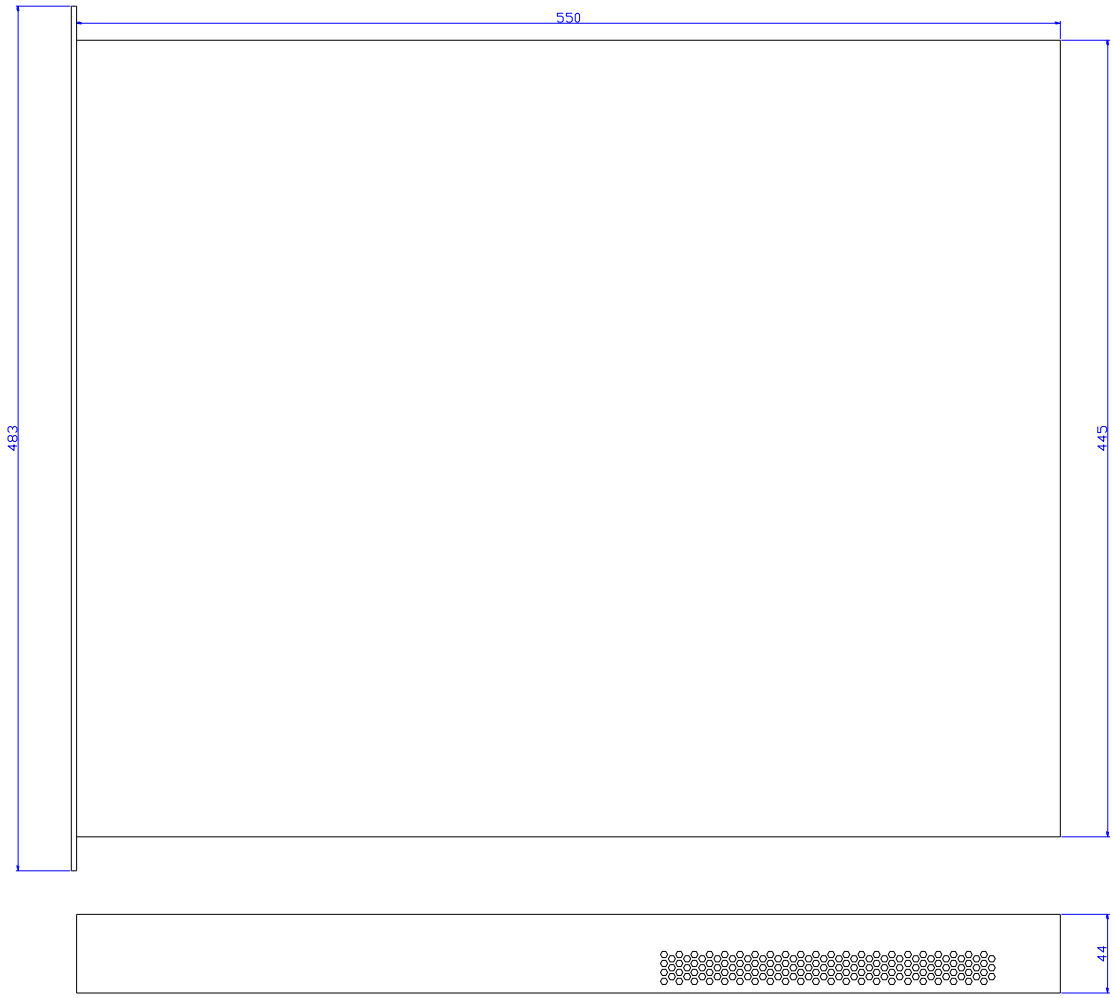

Figure I-6: Iocaste mechanical drawing

II) Interface

A) Customer

On the front face we can find the two ventilation openings, two displays, two selection rotary encoders, push buttons, LED indicators and an USB connector.

Figure II-1 : Iocaste front face

1) Displays

Both displays provide information about the state of the converter.

The left-hand display shows :

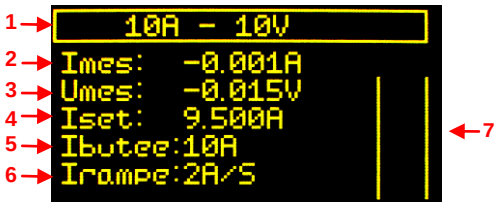

Figure II-2: left screen

1- The nominal values of the converter.
2- Imes : measure of output current.
3- Umes : measure of output voltage.
4- Iset : order current, which cannot be superior to Ibutee.
5- Ibutee : maximum admissible current.
6- Irampe : value of the current ramp in Amp/ps.
7- Barregraph indicating the output power.

The right-hand display can display several pages:

The status page :

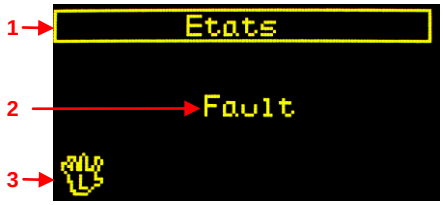

Figure II-3: right screen: Status

1- The title of the page
2- The status of the converter :
   - Fault: the converter presents a fault.
   - Reset: faults in the process are being erased.
   - Off-ready: the converter is stopped and does not present any fault.
   - Power On: the converter has been started and does not present anyfault.
3- Utilization mode :

Local Remote

Figure II-4: right screen: Défauts

Access to this page can be obtained by rotating the FAULT MENU coding wheel.

The fault page :

1- The page title
2- The page number and the number of fault pages
3- List of current faults

Figure II-5: right screen: Profibus / Ethernet adjustments

Access to this page can be obtained by simultaneously pressing the OFF and RESET buttons.

The Profibus/Ethernet adjustment page :

1- The page title
2- The Profibus identifier/ The IP address.

2) Buttons, LEDs

The iocaste front face allows driving the converter directly by using push-buttons, rotative buttons and light indicators.

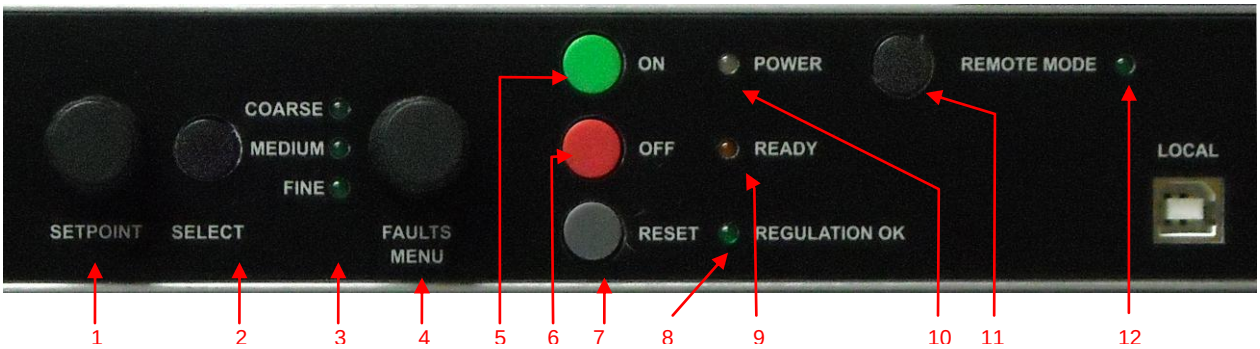

Figure II-6: Iocaste front face buttons and leds

1- **I SET:** enables to modify the current setting in local mode. The modification is visualized on the left-hand display and is validated by a backing.
2- **SELECT:** enables to select the increment level of the I SET current order. Three different levels are available: Fine, Medium and Coarse.
3- **FINE / MEDIUM / COARSE:** Indicates the increment level of the I SET order current, from the finest to the coarsest.
4- **FAULT MENU:** enables to scan the pages containing the current faults in the right-hand display.
5- **ON:** enables to skip from the « **Ready** » state to the « **Power ON** »state in local mode.
6- **OFF:** enables to skip from the « **Power ON** » state to the « **Ready** »state in local mode.
7- **RESET:** erases the faults to come back to the « **Ready** » state. If a fault remains, the fault display is updated.
8- **REGULATION OK:** lights up when the output current has reached the I SET order, with more or less the stability tolerance.
9- **READY:** indicates a fault when the LED is off.
The led is on if the converter has no fault.
10- **POWER:** Green: Indicates the power is on, « **Power ON** » state
Red: Power is disconnected, « **Ready** » or « **Fault** » state.
Orange: on client specification (example « **Standby** »)
11- **REMOTE MODE:** Selects local or remote mode.

The remote mode is signaled by the led (12) and by an icon in the bottom left hand part of the second screen, the local model, by a small hand and by the indicator light being off.

3) USB Connector

The USB connector on the front face enables to connect a computer to the Iocaste and command the converter in local mode.
The communication between the computer and the Iocaste is made with the hyperterminal. The different commands allowing the control of the converter will be expanded upon later on together with the hyperterminal configuration. A driver provided by Hazemeyer is necessary to the dialogue between the two machines.

B) Converter

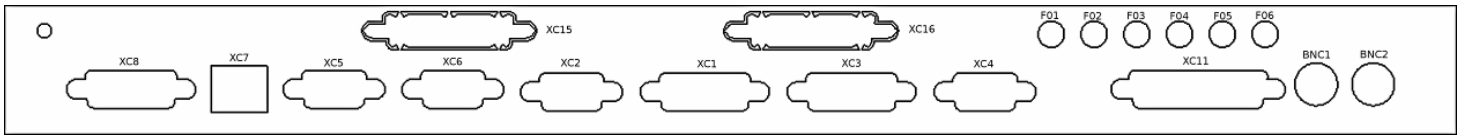

Figure II-7: Iocaste rear face

Various connectors are available on the rear face. Those allow to feed and inform the Iocaste, and to send orders to the converter or to an interface.
Here below is the list of connectors:

1. XC1: Faults and status inputs.
2. XC2: Relay outputs.
3. XC3: Voltage output, transformer primary current and earth current measures.
4. XC4: Output current measure for monitoring.
5. XC5: RS485 Modbus connection.
6. XC6: RS485 Profibus connection.
7. XC7: Ethernet connection.
8. XC8: Iocaste and DCCT power supply.
9. XC11: Output current measure for regulation.
10. XC15: Extension card connector (optional).
11. XC16: Extension card connector (optional).
12. BNC1: Current measure read back (en 0-10 V isolated).
13. BNC2: Voltage measure read back (en 0-10 V isolated).
14. F01, F02, F03, F04, F05, F06: Fiber optical command pulses output and faults input.

III) Connection in local mode via USB

A) Material

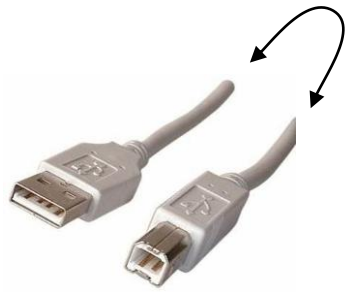

- USB cable (male type A towards male type B)
- PC type computer
- Operating system with a terminal emulator

Example: hyperterminal with Windows 95, 98, 2000, XP.
teraterm with Windows vista and Windows 7.
gtkterm with Linux.

B) Preparation

After starting the Iocaste, connect the Iocaste the computer with the USB connector. On the first connection, it will be necessary to install the driver (provided by Hazemeyer).
Once the connection is made, start your configured terminal emulator:
- 57600 bits per second
- 8 data bits.
- No parity.
- 1 stop bit.
- No flow control.

C) Use of commands

Once your configured terminal emulator is ready, you can enter commands and validate them by pressing « Enter ».
For example, enter the command « about » and validate by pressing « Enter » to display the information on the Iocaste.

⚠ All the commands are case sensitive!

D) Information reading

Commands		Remarks
read	config/tab_ech	Displays the Iocaste configuration
	tab_reg	Displays the regulation board configuration
	mesure	Displays the measures from the regulation board
	ip	Displays the ip / mac address of the Iocaste gateway
	mac	Displays the Iocaste MAC address
	tab_mesure	Displays regulation card measures
	tab_defaut	Displays all faults
	tab_interlock	Displays faults configuration
	tab_comp	Displays offset

Table III-1: Information commands

E) Adjustment of the information on the project

Commands			Remarks
set PROJET@	AFFAIRE	XXXXXX	Changes converter project number
	ALIM	XXX	Changes power supply serial number
	IPE	XXX.XXX	Changes converter nominal current
	UPE	XXX.XXX	Changes converter nominal voltage
	GMAO	XXXXXX	Changes customer serial number

Table III-2: Commands for project information adjustments

Example of project information adjustment:

- « set PROJET@AFFAIRE 800504 »
- « set PROJET@ALIM 15 »
- « set PROJET@IPE 14 »
- « set PROJET@UPE 30 »
- « set PROJET@GMAO 140012 »

F) Adjustment on the Ethernet

Commands		Remarks
ipad	XXX.XXX.XXX.XXX	Changes Ip address
mask	XXX.XXX.XXX.XXX	Changes Mask
gate	XXX.XXX.XXX.XXX	Changes Gateway

Table III-3: Commands for project information adjustments

Example of adjustment for the Ethernet communication:

- « ipad 172.30.2.178 »
- « mask 255.255.255.0 »
- « gate 172.30.2.254 »

G) Faults configuration

Inherent converter and external faults:

Initially, all faults are active:

	FB2	FB2	14	13	12	11	10	9	8	7	6	5	4	3	2	1	Hexa Value
all active	1	1	1	1	1	1	1	1	1	1	1	1	1	1	1	1	0xFFFF
fault 14 inactive	1	1	1	0	1	1	1	1	1	1	1	1	1	1	1	1	0xEFFF

Example to deactivate fault 14 and activate all other faults:

Deactivate fault 14 in software mode:

- « set INTOR@EN DEF 0xEFFF »

Deactivate fault 14 in material mode:

- « set INTOR@TYP DEF 0xEFFF »

To save the faults configuration in the eeprom:

- « save eeprom »

I_{ac} and Earth faults:

Initially, all faults are active:

	ITOR	I-n1	I-n2	ITER	Valeur Hexa
Tous actifs	1	1	1	1	0xF
Defaut 14 inactif	0	1	1	1	0xE

Example to deactivate the ITOR fault and activate all other faults:

Deactivate the ITOR fault in software mode:

- « set IACT@EN DEF 0xE »

Deactivate the ITOR fault in material mode:

- « set IACT@TYP DEF 0xE »

To save the faults configuration in the eeprom:

- « save eeprom »

IV) Regulation adjustment

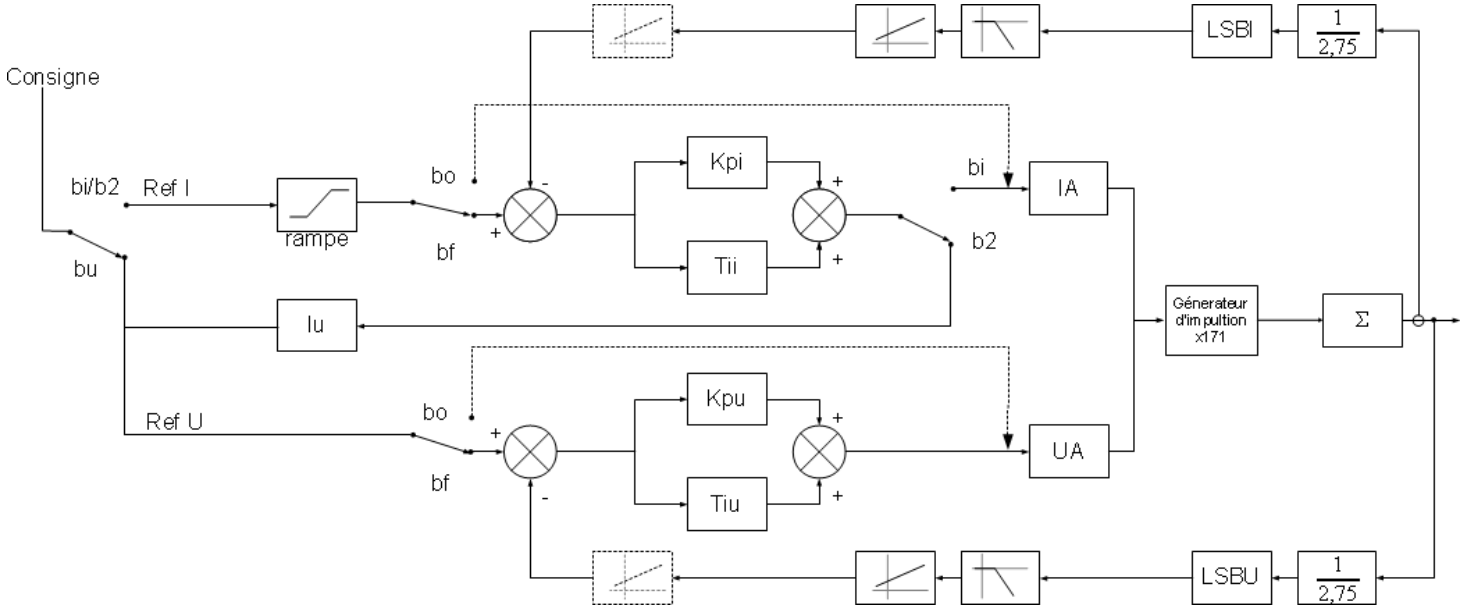

Figure IV-1: Regulation scheme

Kpi, Tii, Kpu, Tiu	PI Regulators correctors' parameters
UA, Iu, IA	Ratios
LSBU, LSBI	Bit values in measures
	Gains and offsets to caliber measures
	Low pass filter
	Current ramp in amps per second (A/s)

The adjustments and selections of the regulation loop are made using the USB local connection.

A) Regulation loop choice

Commands	remarks
bo	Activates the open loop regulation
bf	Activates the close loop regulation
bi	Activates only the current loop regulation
bu	Activates only the voltage loop regulation
b2	Activates both current and voltage loops regulation

Table IV-1: Command for choice of the regulation loop

1) Interlinked current and voltage loops

- Closed :

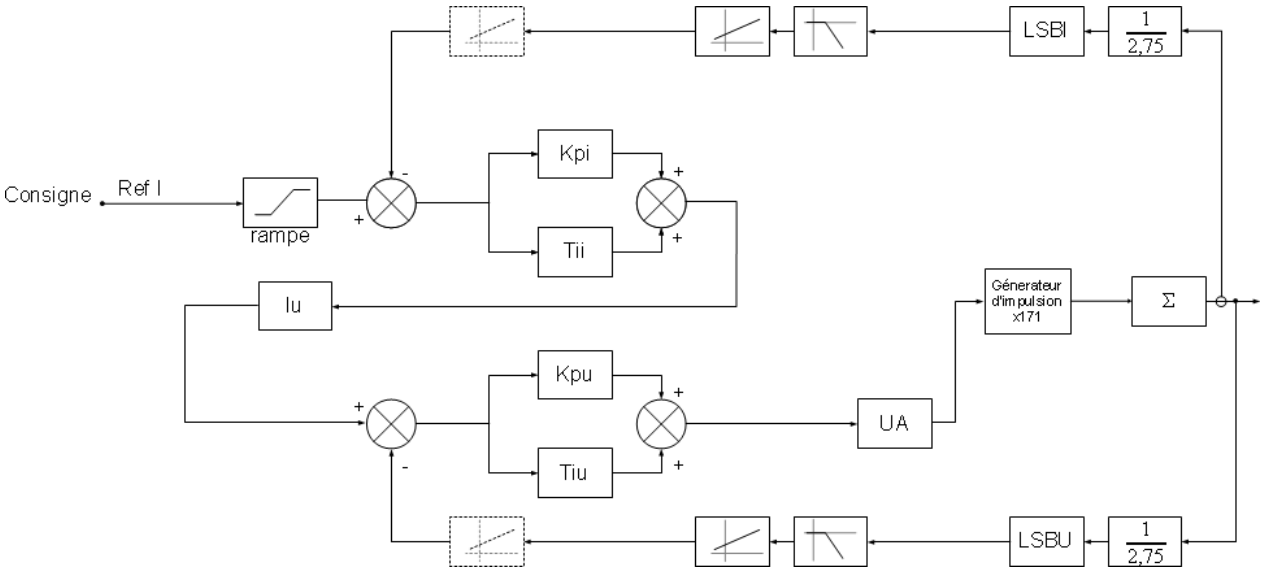

Figure IV-2: Closed interlinked loop regulation scheme

To select a closed interlinked current and voltage loop regulation, the following orders must be entered:
« bf »
« b2 »

Interlinked open loop:
Regulation with an open interlinked current and voltage loop is not possible.

2) Current closed loop

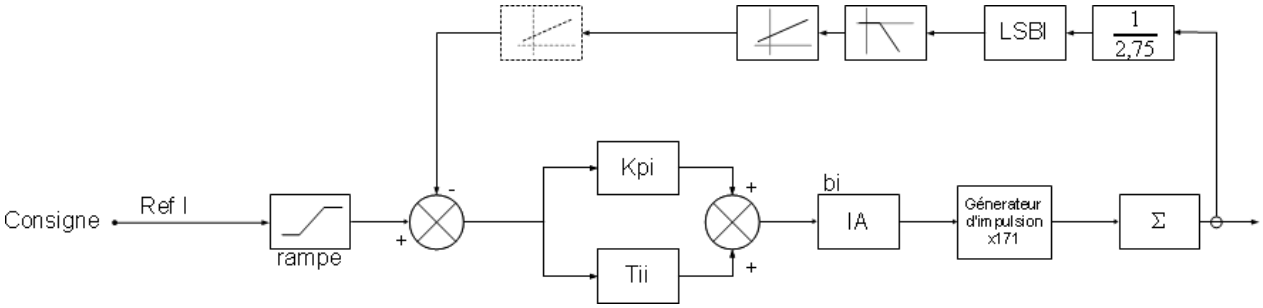

Figure IV-3: Current closed loop regulation scheme

To select a closed current loop regulation, enter commands:

- « bf »
- « bi »

3) Current open loop

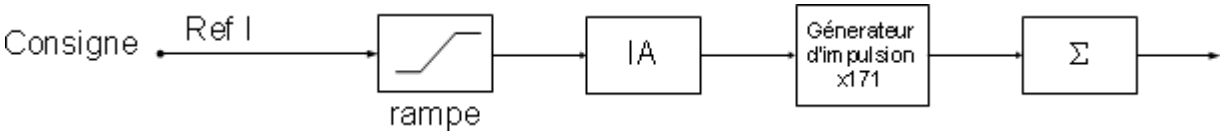

Figure IV-4: Current open loop regulation scheme

To select an open current loop regulation, enter commands:

- « bo »
- « bi »

4) Voltage closed loop

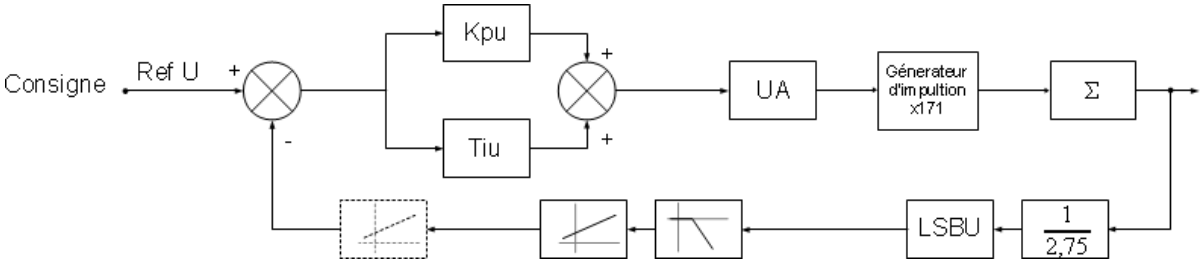

Figure IV-5: Voltage closed loop regulation scheme

So as to select a closed voltage regulation loop, enter the orders:
« bf »
« bu »

5) Voltage open loop

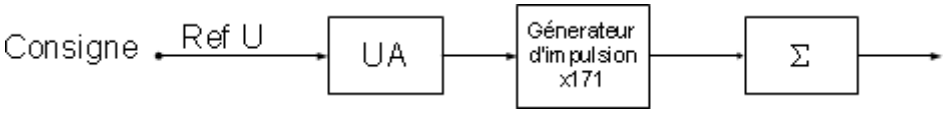

Figure IV-6: Voltage open loop regulation scheme

So as to select an open voltage loop, enter the orders:
« bo »
« bu »

B) Adjustment of the regulation loop parameters

Commandes		Commentaire
calc		Calcul des paramètres correcteur de la boucle de régulation (U et I)
kpi	XXX.XXX	Modifie le Kp de la boucle I
tii	XXX.XXX	Modifie le Ti de la boucle I
kpu	XXX.XXX	Modifie le Kp de la boucle I
tiu	XXX.XXX	Modifie le Ti de la boucle U

Table IV-2: Loop adjustment parameters commands

For both regulation loops, the corrector is of PI type (Integral Proportional):

$$u(t) = K_p * \left(\varepsilon(t) + \frac{1}{T_i} * \int_0^t \varepsilon(\tau) d\tau \right)$$

So as to adjust the loops, it is necessary to modify the parameters Kp and Ti and to recalculate so to integrate the parameters in the regulation. For example, to adjust the current regulation loop, enter the commands:

« kpi 1 »
« tii 0.5 »
« calc »

The adjustment of the voltage regulation loop is carried out in the same way as for the current loop.

C) Adjustment of the EXT regulation loop parameters

Commands		Comment
calc		Calcul des paramètres correcteur de la boucle de régulation (U et I)
EXT kpi	XXX.XXX	Modifie le Kp de la boucle I externe
EXT tii	XXX.XXX	Modifie le Ti de la boucle I externe
EXT kpu	XXX.XXX	Modifie le Kp de la boucle I externe
EXT tiu	XXX.XXX	Modifie le Ti de la boucle U externe

Table IV-3: EXT Loop adjustment parameters commands

The EXT regulation loop parameters are used to configure the regulation loop when an external DCCT is used.

For both regulation loops, the corrector is of PI type (Integral Proportional):

$$u(t) = K_p * \left(\varepsilon(t) + \frac{1}{T_i} * \int_0^t \varepsilon(\tau) d\tau \right)$$

So as to adjust the loops, it is necessary to modify the parameters Kp and Ti and to recalculate so to integrate the parameters in the regulation. For example, to adjust the current regulation loop, enter the commands:

« EXT kpi 1 »
« EXT tii 0.5 »
« calc »

The adjustment of the voltage regulation loop is carried out in the same way as for the current loop.

D) Adjustment of the LSB value

Commands				Comment
set	REG @	LSBU	XXXXXXX.XXXXXXX	Règle la valeur tension d'un bit venant de l'ADC
		LSBI	XXXXXXX.XXXXXXX	Règle la valeur courant d'un bit venant de l'ADC

Table IV-4: LSB value adjustment command

The LSB corresponds to one bit in a measure. The commands « set REG@LSBI » and « set REG@LSBU » allow making a real value correspond to one bit.
For the calculation of the LSB value, take the number of acquisition bits (18 bits) and the value for 11,264 V at the measure input.
Example of the current LSB adjustment:
For 11,264V we have 550 A:

Value of the LSB = $\frac{550}{2^{18}} = \frac{550}{262144} = 0{,}00209808349609375mA$

Once rounded up, so that we don't have more than 1 ppm of error, the LSB value is 0,002098083 mA. Therefore enter the command:

- « set REG@LSBI 0.002098083»

The adjustment of the LSB value for the voltage is carried out in the same way as for the LSB current.

E) Adjustment of the EXT LSB value

Commands				Comment
set	REG @	EXT LSB	XXXXXXX.XXXXXXX	Règle la valeur courant d'un bit venant de l'ADC

Table IV-4: LSB value adjustment command

The EXT LSB is used to configure the external DCCT of the power supply.
The LSB corresponds to one bit in a measure. The command « set REG@EXT LSB »allow making a real value correspond to one bit.
For the calculation of the LSB value, take the number of acquisition bits (18 bits) and the value for 11,264 V at the measure input.
Example of the current LSB adjustment:
For 11,264V we have 550 A:

Value of the LSB = $\frac{550}{2^{18}} = \frac{550}{262144} = 0{,}00209808349609375mA$

Once rounded up, so that we don't have more than 1 ppm of error, the LSB value is 0,002098083 mA. Therefore enter the command:

- « set REG@EXT LSB 0.002098083»

F) Adjustment of gains and offsets

Command for the calibration of the power converter compared to the load:

Commands						Remarks
set	REG	@	G	CARTE	XXXXXXX.XXXXXXX	Adjust the order 1 gain value of the current measure read back of the regulation card.
			O		XXXXXXX.XXXXXXX	Adjust the order 1 offset value of the current measure read back of the regulation card.
			G	ALIM	XXXXXXX.XXXXXXX	Adjust the second order 1 gain value of the current measure read back of the regulation card.
			O		XXXXXXX.XXXXXXX	Adjust the second order 1 offset value of the current measure read back of the regulation card.

Table IV-5: Offsets and gains adjsutment commands of the regulation card

So as to adjust the offsets and the gains, gains are set at 0 the offset at 0:

- « set REG@G CARTE 0 »
- « set REG@O CARTE 0 »
- « set REG@G ALIM 0 »
- « set REG@O ALIM 0 »

Once the gains and offsets have been adjusted, measures are taken to note the difference between the measure and the order. Thanks to these notes, a linear regression is carried out to find out the gain (a) and the offset (b) of rank 1.
Once the offset and gain of rank 1 are set, carry out the same operation to refine the calibration with a second linear regression.

G) Adjustment of the information trip setpoints

Commands				Remarks
Set	REG @	OVU	XXXXXX	Set the overvoltage information trip set point
		OVI	XXXXXX	Set the overcurrent information trip set point

Table IV-6: Trip information set points adjustment commands.

Two set points can trip information. The first one is the trip set point of the «overvoltage» fault. For example, if you consider that overvoltage is reached at 100V, enter the command:

- « set REG@OVU 100 »

The second one is the trip set point of the «overcurrent» fault. For example, if you consider that overcurrent is reached at 80A, enter the command:

- « set REG@OVI 80 »

H) Ramp adjustment

Commands					Remarks
set	REG	@	RAMP	XXXXXXX.XXXXXXX	Set the current ramp value (A/s)

Table IV-7: Current ramp value adjustment command

The current ramp determines the variation of the current order over time. For example, for a current order of 10A in 4 seconds, which results in a ramp of 2,5A/s, enter the command:

- « set REG@RAMP 2,5 »

⚠ A ramp at 0A/S is possible but blocks the adjustment.

I) Ratios adjustment

Commands				Remarks
set	REG @ RATIO	IU	XXXXXXX.XXXXXXX	Set the coefficient between I set and U set
		IA	XXXXXXX.XXXXXXX	Set the coefficient between I set and pulse width
		UA	XXXXXXX.XXXXXXX	Set the coefficient between U set and pulse width

Table IV-8: Ratio adjustment comand

The IU ratio is the coefficient between current and voltage settings. It corresponds to the load impedance.
The IA ratio is the ratio between the current setting and the pulse width. The equation to calculate it is:

- $$IA = \frac{\frac{F.\mu}{F.Pulse} * 2 * 171}{110\% \text{ de Imax}}$$

With F.µ = 18,432 MHz.

- FPulse = switching frequency
- Imax = converter nominal current

The UA ratio is the ration between the U command and the switch mode frequency and the pulse width. Here below is the equation to calculate it:

- $$UA = \frac{\frac{F.\mu}{F.Pulse} * 2 * 171}{110\% \text{ de Umax}}$$

With F.µ = 18,432 Mhz

- F.Pulse = switching frequency
- Umax = converter nominal voltage

J) Current and voltage orders modification

Commands		Remarks
refi	XXX.XXX	Changes the current loop regulation setting
refu	XXX.XXX	Changes the voltage loop regulation setting (only for the voltage loop)

Table IV-9: Current and voltages settings modification command

The command of a regulation loop can be modified:

- for the current loop by the command « refi »
- for the voltage loop by the command « refu » only in voltage loop

For example, to obtain 10 A, enter the command:

- « refi 10 »

V) Modbus

The Iocaste is a Modbus slave which can read frames in RTU mode (8 bits data). Its address is 0x01.
The link is made either via the XC5 connector in rs485, or via the XC7 connector via Ethernet (TCP/IP Modbus).

List of the Modbus functions and their compatibility with the Iocaste:

				Fonction codes		IOCASTE
				code	(hex)	
Accés aux donnés	BIT	Entrées physiques discretes	Lecture de N bits de entrée	02	02	X
		Bit interne ou bobine physique	Lecture de N bits de sortie	01	01	X
			Ecriture d'un bit de sortie	05	05	X
			Ecriture de N bits de sortie	15	0F	
	MOT (16 bits)	Registre physique d'entrée	Lecture de N mots d'entrée	04	04	X
		Registre interne ou Registre de sortie physique	Lecture de N mots de sortie	03	03	X
			Ecriture d'un mot de sortie	06	06	X
			Ecriture de N mots de sortie	16	10	X
			Lecture/Ecriture multiple de registre	23	17	X
			Registre de masque d'écriture	22	16	
			Lecture de la queue FIFO	24	18	
	Fichier		Lecture d'un fichier	20	14	
			Ecriture d'un fichier	21	15	
Diagnostics			Lecture du registre d'exception	07	07	
			Diagnostic	08	08	
			Lecture du compteur d'événement	11	OB	
			Lecture du fichier d'événement	12	0C	
			Lecture du l'identifiant de l'esclave	17	11	
			Lecture de l'indentication du périphérique	43	2B	

Table V-1: Modbus Codes and fonctions and their compatiblities with the Iocaste

The Modbus table exchange is annexed to the present document.

VI) Profibus

The Profibus is transmitted via RS 485 to the Iocaste with a DP communication pattern, in a flow rate ranging from 9,6 kbit/s to 12 Mbit/s selected at the start of the network and valid for all the bus subscribers.
The transmission characteristics of the Iocaste are listed in a GSD file (provided by Hazemeyer). Moreover, the Profibus exchange table is annexed

VII) Utilization

The iocaste has to be configured with the converter and the loads should be connected before it is used.

A) Faults resetting

The elimination of faults is carried out:

- In local mode with
  - The RESET button on the front face.
  - The « reset » command with the USB local connection.
- In remote mode with :
  - The switch to 1 of bit 2 of PLC 40001 register in Modbus.
  - The switch to 1 of bit 2 of the 0x00 output register in Profibus

⚠ Only the faults that are no longer active will be erased.

B) Starting the converter

The start of the converter can only be made when all the faults have been erased:

- In local mode with
  - The ON button on the front face.
  - The « start » command with the USB local connection.
- In remote mode with :
  - The switch to 1 of bit 0 of the PLC 40001 register in Modbus.
  - The switch to 1 of bit 0 of the 0x00 output register in Profibus

C) Stopping the converter

- The converter can be stopped with :
  - The OFF button on the front face.
  - The « stop » command with the USB local connection.
  - The switch to 1 of bit 1 of PLC 40001 register in Modbus.
  - The switch to 1 of bit 1 of 0x00 output register in Profibus

D) Order adjustment

The adjustment of the order is carried out:

- In local mode with
  - The SETPOINT coding wheel on the front face.
  - The « refi » command (or « refu » in voltage loop) with the USB local connection.

⚠ The « refi » and « refu » commands also validate the order.

- In remote mode with :
  - The modification of the PLC 40002 register in Modbus for order I.
  - The modification of PLC 40004 register in Modbus for order U.
  - The modification of 0x02 output register in Profibus for order I.
  - The modification of 0x03 output register in Profibus for order U.

E) Validation of the order

The validation of the order is carried out:

- in local mode with
  - The SETPOINT coding wheel on the front face by pressing on it.

- The adjustment of the order in USB local connection.
- In remote mode with :
  - The switch to 1 of bit 3 of PLC 40001 register in Modbus.
  - The switch to 1 of bit 3 of 0x00 output register in Profibus

F) Visualization of the order

The visualization of the order is carried out:

- In local mode
  - On the left-hand display beside the ISET.

⚠ If the order is modified with the SETPOINT coding wheel, then the value is no longer the current value but the value desired.

  - the « read tab_mesure » command with the USB local connection.
- In remote mode with :
  - The reading of the PLC 40010 register in Modbus for order I.
  - The reading of the PLC 40012 register in Modbus for order U.
  - The reading of 0x0A input register in Profibus for order I.
  - The reading of 0x0E input register in Profibus for order U.

VIII) Appendix

A) List of commands

List of commands, with a comment for each command and whether they are usable when in remote mode.

Orders are case sensitive!

Commande		Mode remote	Commentaire
<p		X	relance la derniere commande
about		X	information sur le iocaste avec l'heure de programmation
help		X	affiche toute les commandes disponibles
start			Démarre l'alimentation si elle n'a pas de défaut
stop		X	Arrête l'alimentation.
reset			Arrête l'alimentation et acquite les défauts
restart			Redémarrer le microcontrôleur
state		X	Affiche l'état des alimentations
read	config/tab_ech	X	Affiche la configuration du IOCASTE
	tab_reg	X	Affiche la configuration de la carte régulation
	mesure	X	Affiche les mesures venant de la carte régulation
	ip	X	Affiche l'adresse ip / mac / de la passerelle du IOCASTE
	mac	X	Affiche l'adresse mac du IOCASTE
	tab_mesure	X	Affiche les mesures venant de la carte mère
	tab_defaut	X	Affiche tous les défauts
	tab_interlock	X	Affiche la configuration des défauts
	tab_comp	X	Affiche les compensations
save	eeprom	X	Sauvegarde dans l'eeprom les registres utiles
defaut		X	Mets à défaut les registres utiles
ipad	XXXX		Modifie l'adresse ip du IOCASTE (Nécessite un redémarrage)
mask	XXXX		Modifie le masque ip du IOCASTE (Nécessite un redémarrage)
gate	XXXX		Modifie la passerelle ip du IOCASTE (Nécessite un redémarrage)
calc			Applique des paramétres correcteurs de la boucle de régulation (U et I)
bo			Active la régulation en boucle ouverte
bf			Active la régulation en boucle fermé
bi			Active la régulation seulement en boucle I
bu			Active la régulation seulement en boucle U
b2			Active la régulation en boucle I et U
refi	XXXX		Modifie la consigne pour la régulation en boucle I
refu	XXXX		Modifie la consigne pour la régulation seulement en boucle U
kpi	XXXX		Modifie le Kp de la boucle I
tii	XXXX		Modifie le Ti de la boucle I
kpu	XXXX		Modifie le Kp de la boucle I
tiu	XXXX		Modifie le Ti de la boucle U
set PROJET@	AFFAIRE		Modifie le numéro d'affaire liés à l'alimentation
	ALIM		Modifie le numéro d'alimentation
	IPE		Modifie le courant nominal de l'alimentation
	UPE		Modifie le tension nominal de l'alimentation
	GMAO		Modifie le numéro Client

Table VIII-1: First part of available commands in local mode

Commande						Mode remote	Commentaires
set	DEFMES	@	TYP	DEF	0xXXXX		Choisit le type (1 Défaut / 0 Alarme) des informations de mesures analogiques Carte Mère
			EN				Active ou désactive la prise en compte des informations des mesures analogiques Carte Mère
	IACT		TYP	DEF			Choisit le type (1 Défaut / 0 Alarme) des informations de mesures analogiques Carte Rég
			EN				Active ou désactive la prise en compte des informations des mesures analogiques Carte Rég
	INTOR		TYP	DEF			Choisit le type (1 Défaut / 0 Alarme) des informations Tout Ou Rien
			EN				Active ou désactive la prise en compte des informations Tout Ou Rien
	DEFCARD		TYP	DEF			Choisit le type (1 Défaut / 0 Alarme) des informations internes IOCASTE
			EN				Active ou désactive la prise en compte des informations internes IOCASTE
set	REG	@	LSBU		XXXXXXX.XXXXXXX		Règle la valeur tension d'un bit venant de l'ADC
			LSBI		XXXXXXX.XXXXXXX		Règle la valeur courant d'un bit venant de l'ADC
			OVU		XXXXXX		Règle le seuil de déclenchement d'une information surtension
			OVI		XXXXXX		Règle le seuil de déclenchement d'une information surintensité
			RAMP		XXXXXXX.XXXXXXX		Règle la valeur de la rampe de courant en Ampère/Secondes
			G	CARTE	XXXXXXX.XXXXXXX		Règle la valeur du gain d'ordre 1 du retour de la mesure I sur la carte rég
			O		XXXXXXX.XXXXXXX		Règle la valeur du offset d'ordre 1 du retour de la mesure I sur la carte rég
			G	ALIM	XXXXXXX.XXXXXXX		Règle la valeur du gain d'ordre 2 du retour de la mesure I sur la carte rég
			O		XXXXXXX.XXXXXXX		Règle la valeur du offset d'ordre 2 du retour de la mesure I sur la carte rég
			RATIO	IU	XXXXXXX.XXXXXXX		Règle le cœfficient entre la commande I et la commande U
				IA	XXXXXXX.XXXXXXX		Règle le rapport entre la commande I et la largeur des pulses
				UA	XXXXXXX.XXXXXXX		Règle le rapport entre la commande U et la largeur des pulses
set	COMP	@	G0	DCCT2	XXX.XXXX		Règle la valeur du gain d'ordre 1 du retour de la mesure de courant du DCCT
			O0		XXX.XXXX		Règle la valeur du offset d'ordre 1 du retour de la mesure de courant du DCCT
			G1		XXX.XXXX		Règle la valeur du gain d'ordre 2 du retour de la mesure de courant du DCCT
			O1		XXX.XXXX		Règle la valeur du offset d'ordre 2 du retour de la mesure de courant du DCCT
			G	U2	XXX.XXXX		Règle la valeur du gain du retour de la mesure de tension U2
			O		XXX.XXXX		Régle la valeur du offset du retour de la mesure de tension du U2
			G	IAC	XXX.XXXX		Régle la valeur du gain du retour de la mesure de tension du DCCT
			O		XXX.XXXX		Régle la valeur du offset du retour de la mesure de tension du DCCT
			G	USPARE	XXX.XXXX		Régle la valeur du gain du retour de la mesure de tension du DCCT
			O		XXX.XXXX		Régle la valeur du offset du retour de la mesure de tension du DCCT
			G	ITERRE	XXX.XXXX		Régle la valeur du gain du retour de la mesure de courant du DCCT
			O		XXX.XXXX		Régle la valeur du offset du retour de la mesure de courant du DCCT
set	LSB	@	DCCT2		XXX.XXXX		Régle la valeur courant d'un bit venant de l'ADC liée au DCCT
			U2		XXX.XXXX		Régle la valeur tension d'un bit venant de l'ADC liée a U2
			IAC		XXX.XXXX		Régle la valeur courant d'un bit venant de l'ADC liée au IAC
			USPARE		XXX.XXXX		Régle la valeur tension d'un bit venant de l'ADC liée a USPARE
set	BUTE	@	MIN		XXX.XXXX		Régle la valeur maximum du courant de l'alimentation
			MAX		XXX.XXXX		Régle la valeur minimum du courant de l'alimentation
	SURV		IMP		XXX.XXXX		Régle la valeur de surveilllance de l'impédance
			FDI		XXX.XXXX		Régle la valeur de surveilllance de l'impédance

Table VIII-2: Second part of available commands in local mode

B) Initial configuration

To initially configure the Iocaste:

- Initialization of registers which will need to be saved in the eeprom memory:
  « defaut eeprom »
- Save registers in eeprom memory:
  « save eeprom »
- Restart microcontroller:
  « restart »
- Define measure information as warning:
  « set DEFMES@TYP DEF 0x00 »
- Deactivate measure information:
  « set DEFMES@EN DEF 0x00 »
- Define external information as warning:
  « set DEFCARD@TYP DEF 0x00 »
- Deactivate internal information:
  « set DEFCARD@EN DEF 0x00 »
- Save registers in eeprom memory:
  « save eeprom »
- Restart the microcontroller
  « restart »

Dans le cas d'un convertisseur déjà réglé en usine, la réinitialisation du Iocaste supprime la configuration optimale réalisée avant livraison!

IX) Connectors

1) XC1 : faults and status input.

Signal	Fonction	Pin
Défaut 1		XC1-01
Défaut 2		XC1-02
Défaut 3		XC1-03
Défaut 4		XC1-04
Défaut 5		XC1-05
+24V		XC1-06
+24V		XC1-07
Etats 1		XC1-08
Etats 2		XC1-09
Défaut 6		XC1-10
Défaut 7		XC1-11
Défaut 8		XC1-12
Défaut 9		XC1-13
Défaut 10		XC1-14
Etats 3		XC1-15
Etats 4		XC1-16
Etats 5		XC1-17
Etats 6		XC1-18
Défaut 11		XC1-19
Défaut 12		XC1-20
Défaut 13		XC1-21
Défaut 14		XC1-22
Terre		XC1-23
Etats 7		XC1-24
Etats 8		XC1-25

Table IX-1: XC1 pinlist

XC1 is 26 pins male connector allowing faults and status readable on the Iocaste.

2) XC2: Control outputs

Signal	Fonction	Pin
OFF_-		XC2-01
$READY_-$		XC2-02
ON_-		XC2-03
Control 1_-		XC2-04
Control 2_-		XC2-05
Control 3_-		XC2-06
Control 4_-		XC2-07
Terre		XC2-08
OFF_+		XC2-09
$READY_+$		XC2-10
ON_+		XC2-11
Control 1_+		XC2-12
Control 2_+		XC2-13
Control 3_+		XC2-14
Control 4_+		XC2-15

Table IX-2: XC2 pinlist

XC2 is 15 pins male connector where Iocaste outputs are.

3) XC3: Voltage, current measures

Signal	Fonction	Pin
+I	I_{AC} I	XC3-01
+U1	I_{AC} U1	XC3-02
+U2	I_{AC} U2	XC3-03
-U	I_{terre}	XC3-04
+U	I_{terre}	XC3-05
Terre		XC3-06
$+U_{MONI}$	$U_{MONITORING}$	XC3-07
$-U_{MONI}$	$U_{MONITORING}$	XC3-08
Blindage	Réserve	XC3-09
-I	I_{AC} I	XC3-10
-U1	I_{AC} U1	XC3-11
-U2	I_{AC} U2	XC3-12
P0 I_{terre}	I_{terre}	XC3-13
$P0U_{REG}$	$U_{REGULATION}$	XC3-14
Blindage	$U_{REGULATION}$	XC3-15
Blindage	$U_{MONITORING}$	XC3-16
-Sense	Réserve	XC3-17
+Sense	Réserve	XC3-18
Blindage	I_{AC} I	XC3-19
Blindage	I_{AC} U1	XC3-20
Blindage	I_{AC} U2	XC3-21
Blindage	I_{terre}	XC3-22
$+U_{REG}$	$U_{REGULATION}$	XC3-23
$-U_{REG}$	$U_{REGULATION}$	XC3-24
$P0_{MONI}$	$U_{MONITORING}$	XC3-25
$P0_{réserve}$	Réserve	XC3-26

Table IX-3: XC3 pinlist

XC3 is 26 pins male connector input for measures:

- output voltage
- transformer primary current
- earth current

4) XC4: Output current measures for monitoring

Signal	Fonction	Pin
Sense+		XC4-01
+		XC4-02
+15V_MONI		XC4-03
+15V	InterLocks	XC4-04
Zero current	InterLocks	XC4-05
Sense-		XC4-06
-		XC4-07
GNDA_MONI		XC4-08
+15V	InterLocks	XC4-09
Head connected	InterLocks	XC4-10
Blindage		XC4-11
Blindage		XC4-12
-15V_MONI		XC4-13
+15V	InterLocks	XC4-14
Normal running	InterLocks	XC4-15

Table IX-4: XC4 pinlist

XC4 is a 15 pins male connector.

5) XC5: Modbus connection

Signal	Fonction	Pin
DGND COM	Modbus	XC5-01
	Modbus	XC5-02
	Modbus	XC5-03
	Modbus	XC5-04
	Modbus	XC5-05
	Modbus	XC5-06
	Modbus	XC5-07
	Modbus	XC5-08
	Modbus	XC5-09

Table IX-5: XC5 pinlist

XC5 is a 9 pins female connector.

6) XC6: Profibus connection

Signal	Fonction	Pin
Blindage	Profibus	XC6-01
NC	Profibus	XC6-02
A	Profibus	XC6-03
CNTR_P	Profibus	XC6-04
DGND COM	Profibus	XC6-05
+D5V_COM	Profibus	XC6-06
NC	Profibus	XC6-07
B	Profibus	XC6-08
CNTR_N	Profibus	XC6-09

Table IX-6: XC6 pinlist

XC6 is a 9 pins female connector.

7) XC7: Ethernet connection

Signal	Fonction	Pin
TD+	Ethernet	XC7-01
TD-	Ethernet	XC7-02
RD+	Ethernet	XC7-03
3V3	Ethernet	XC7-04
3v3	Ethernet	XC7-05
RD-	Ethernet	XC7-06
NC	Ethernet	XC7-07
Terre	Ethernet	XC7-08

Table IX-7: XC7 pinlist

XC7 is a RJ45 connector.

8) XC8: DCCT and Iocaste power supply

Signal	Fonction	Pin
GND	Alim IOCASTE	XC8-02
-15V	Alim IOCASTE	XC8-03
+24Vdc		XC8-04
0V (+24Vdc)		XC8-05
+15V_DCCT	Alim DCCT	XC8-06
GND_DCCT	Alim DCCT	XC8-07
-15V_DCCT	Alim DCCT	XC8-08
+15V	Alim IOCASTE	XC8-09
GND	Alim IOCASTE	XC8-10
-15V	Alim IOCASTE	XC8-11
Terre		XC8-12
+15V_DCCT	Alim DCCT	XC8-13
GND_DCCT	Alim DCCT	XC8-14
-15V_DCCT	Alim DCCT	XC8-15

Table IX-8: XC8 pinlist

XC8 is a 15 pins male connector.

9) XC11: Output current measure for regulation

XC11 is a 15 pins male connector.

Signal	Fonction	Pin
+15V_MACC	$I_{REGULATION\ (MACC)}$	XC11-01
-15V_MACC	$I_{REGULATION\ (MACC)}$	XC11-02
GND_MACC	$I_{REGULATION\ (MACC)}$	XC11-03
		XC11-04
		XC11-05
$+I_{REG}$	$I_{REGULATION\ (MACC)}$	XC11-06
Fonctionnement OK	$I_{REGULATION\ (MACC)}$	XC11-07
		XC11-08
		XC11-09
		XC11-10
		XC11-11
		XC11-12
		XC11-13
		XC11-14
		XC11-15

Table IX-9: XC11 pinlist

10) F01, F02, F03, F04, F05, F06

Signal	Fonction	Pin
FO1		FO-01
FO2		FO-02
FO3		FO-03
FO4		FO-04
FO5		FO-05
FO6		FO-06

Table IX-10: optical fiber list

11) BNC01-BNC02

BNC01 is a conversion of the output current (0-10 V isolated).
BNC01 is a conversion of the output voltage (0-10 V isolated).

12) XC15 – XC16: extension card

In this project the MIT546 is an extension card. It allows providing an isolated setting readback and provides an input for the TTL signal.

B) Iocaste composition

Iocaste is composed by:

- 1 motherboard MB441.
- 1 regulation card REG445.
- 1 display card AFF488.
- 1 measure card MES547
- 1 extension card MIT546

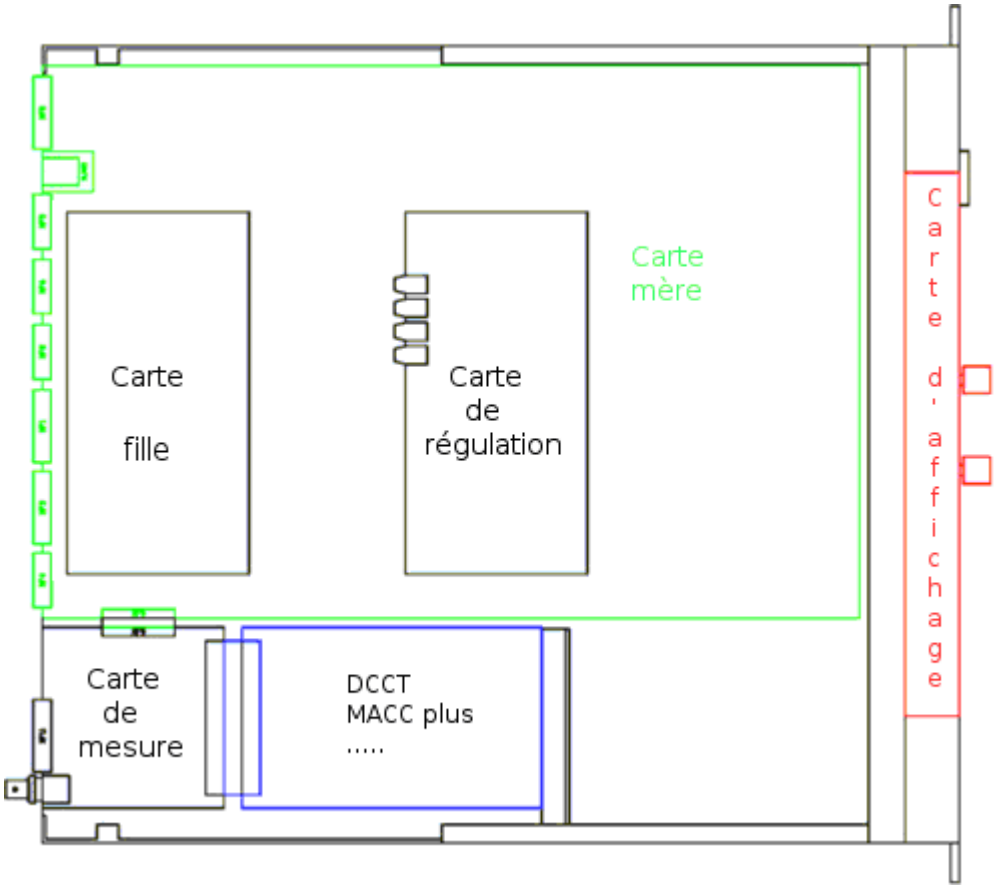

Table IX-11: Iocaste composition

C) Profibus exchange table

1) Output register

Octet sortie	Description	MSB	6	5	4	3	2	1	LSB
0x00	Commande				Remote	Rampstart	Reset	Pwr Off	Pwr On
0x01									
0x02	Current Set	The floating numbers' format follows the IEEE-754 standard							
0x03									
0x04									
0x05									
0x06									

réservé

2) Input Register

Octet entrée	Description	MSB	6	5	4	3	2	1	LSB
0x00	Global status	Global fault	Regulation Ok	Local	Remote	Ramp Progress	Ready	Pwr Off	Pwr On
0x01	Regulation fault							OverCurrent Output	OverVoltage output
0x02	Optionnal analog input fault								Monitoring current input
0x03	Hardware IAC + Ground fault					Ground fault		IAC M2	IAC M1
0x04	Interlock fault input Reg0	Temperature Buck2	Temperature Buck1	Thermal breaker	Temperature Transformer	Temperature L3-L13	Temperature L2-L12	Temperature L1-L11	Doors
0x05	Interlock fault input Reg1	Driver fault 2	Driver fault 1			External fault	Flow meter	Phases fault	Fuses fault
0x06	Internal fonction fault			Global Alarm	TimeOut Eeprom	Data Eeprom fault	Def_card fonction fault	Intor fonction fault	IAC fonction fault
0x07	Internal card fault								
0x08	Internal communication fault						Profibus com. fault	Display card fault	REG comm. Fault
0x09									
0x0A 0x0B 0x0C 0x0D	Current Measure Unit: Ampere	The floating numbers' format follows the IEEE-754 standard							
0x0E 0x0F 0x10 0x11	Voltage Measure Unit: Voltage	The floating numbers' format follows the IEEE-754 standard							
0x12 0x13 0x14 0x15	Current read back Unit: Ampere	The floating numbers' format follows the IEEE-754 standard							
0x16 0x17 0x18 0x19	Current monitoring Unit: Ampere	The floating numbers' format follows the IEEE-754 standard							
0x1A 0x1B 0x1C 0x1D	Voltage input 2 measure Unit: Voltage	The floating numbers' format follows the IEEE-754 standard							
0x1E 0x1F 0x20 0x21	IAC measure Unit: Ampere	The floating numbers' format follows the IEEE-754 standard							
0x22 0x23 0x24 0x25	Spare input measure Unit: Voltage	The floating numbers' format follows the IEEE-754 standard							
0x26 0x27 0x28 0x29	Ground input measure Unit: Ampere	The floating numbers' format follows the IEEE-754 standard							
0x2A 0x2B 0x2C 0x2D	Regulation temp measure Unit: °C	The floating numbers' format follows the IEEE-754 standard							
0x2E 0x2F 0x30 0x31	Mainboard temp measure Unit: °C	The floating numbers' format follows the IEEE-754 standard							

réservé

D) Modbus exchange table

Type de données	Registre	Accès	Description	MSB	14	13	12	11	10	9	8	7	6	5	4	3	2	1	LSB
bits	00 - 40001	Lecture / Écriture en mode remote	Commande	Surveillance ON	Surveillance OFF											Rampstart	Reset	Power Off	Power ON
float	01 - 40002		Rampe de courant	B15	B14	B13	B12	B11	B10	B09	B08	B07	B06	B05	B04	B03	B02	B01	B00
	02 - 40003			B31	B30	B29	B28	B27	B26	B25	B24	B23	B22	B21	B20	B19	B18	B17	B16
float	03 - 40004		Fourchette de surveillance	B15	B14	B13	B12	B11	B10	B09	B08	B07	B06	B05	B04	B03	B02	B01	B00
	04 - 40005			B31	B30	B29	B28	B27	B26	B25	B24	B23	B22	B21	B20	B19	B18	B17	B16
float	05 - 40006		Consigne Courant	B15	B14	B13	B12	B11	B10	B09	B08	B07	B06	B05	B04	B03	B02	B01	B00
	06 - 40007			B31	B30	B29	B28	B27	B26	B25	B24	B23	B22	B21	B20	B19	B18	B17	B16
float	07 - 40008		Consigne tension	B15	B14	B13	B12	B11	B10	B09	B08	B07	B06	B05	B04	B03	B02	B01	B00
	08 - 40009			B31	B30	B29	B28	B27	B26	B25	B24	B23	B22	B21	B20	B19	B18	B17	B16
float	09 - 40010	Écriture	Valeur courant	B15	B14	B13	B12	B11	B10	B09	B08	B07	B06	B05	B04	B03	B02	B01	B00
	10 - 40011			B31	B30	B29	B28	B27	B26	B25	B24	B23	B22	B21	B20	B19	B18	B17	B16
float	11 - 40012		Valeur consigne tension	B15	B14	B13	B12	B11	B10	B09	B08	B07	B06	B05	B04	B03	B02	B01	B00
	12 - 40013			B31	B30	B29	B28	B27	B26	B25	B24	B23	B22	B21	B20	B19	B18	B17	B16
float	13 - 40014		Valeur tension	B15	B14	B13	B12	B11	B10	B09	B08	B07	B06	B05	B04	B03	B02	B01	B00
	14 - 40015			B31	B30	B29	B28	B27	B26	B25	B24	B23	B22	B21	B20	B19	B18	B17	B16
bits	15 - 40016		États									Régulation OK	Global Fault	No busy	Local	Remote	Ready	Power Off	Power ON
bits	16 - 40017		Interlock fault input	Fault 16	Fault 15	Fault 14	Fault 13	Fault 12	Fault 11	Fault 10	Fault 9	Fault 8	Fault 7	Fault 6	Fault 5	Fault 4	Fault 3	Fault 2	Fault 1
bits	17 - 40018																		
bits	18 - 40019																		
bits	19 - 40020																		
bits	20 - 40021		Défaut client																
bits	21 - 40022		Défaut client																
bits	22 - 40023		États client																
bits	23 - 40024		États client																
float	24 - 40025		Butée maximum du courant	B15	B14	B13	B12	B11	B10	B09	B08	B07	B06	B05	B04	B03	B02	B01	B00
	25 - 40026			B31	B30	B29	B28	B27	B26	B25	B24	B23	B22	B21	B20	B19	B18	B17	B16
float	26 - 40027		Butée minimum du courant	B15	B14	B13	B12	B11	B10	B09	B08	B07	B06	B05	B04	B03	B02	B01	B00
	27 - 40028			B31	B30	B29	B28	B27	B26	B25	B24	B23	B22	B21	B20	B19	B18	B17	B16
float	28 - 40029		Variation relation d'impédance	B15	B14	B13	B12	B11	B10	B09	B08	B07	B06	B05	B04	B03	B02	B01	B00
	29 - 40030			B31	B30	B29	B28	B27	B26	B25	B24	B23	B22	B21	B20	B19	B18	B17	B16
float	30 - 40031		Valeur du courant maximum	B15	B14	B13	B12	B11	B10	B09	B08	B07	B06	B05	B04	B03	B02	B01	B00
	31 - 40032			B31	B30	B29	B28	B27	B26	B25	B24	B23	B22	B21	B20	B19	B18	B17	B16
float	32 - 40033		Valeur de la tension maximum	B15	B14	B13	B12	B11	B10	B09	B08	B07	B06	B05	B04	B03	B02	B01	B00
	33 - 40034			B31	B30	B29	B28	B27	B26	B25	B24	B23	B22	B21	B20	B19	B18	B17	B16
float	34 - 40035		Rampe local	B15	B14	B13	B12	B11	B10	B09	B08	B07	B06	B05	B04	B03	B02	B01	B00
	35 - 40036			B31	B30	B29	B28	B27	B26	B25	B24	B23	B22	B21	B20	B19	B18	B17	B16
ulong	36 - 40037		Code affaire	B15	B14	B13	B12	B11	B10	B09	B08	B07	B06	B05	B04	B03	B02	B01	B00
	37 - 40038			B31	B30	B29	B28	B27	B26	B25	B24	B23	B22	B21	B20	B19	B18	B17	B16
ulong	38 - 40039		Numéro GMAO	B15	B14	B13	B12	B11	B10	B09	B08	B07	B06	B05	B04	B03	B02	B01	B00
	39 - 40040			B31	B30	B29	B28	B27	B26	B25	B24	B23	B22	B21	B20	B19	B18	B17	B16
uint	40 - 40041		Code alimentation	B15	B14	B13	B12	B11	B10	B09	B08	B07	B06	B05	B04	B03	B02	B01	B00
uint	41 - 40042		Version de prog MB441	B15	B14	B13	B12	B11	B10	B09	B08	B07	B06	B05	B04	B03	B02	B01	B00
uint	42 - 40043		Version de prog REG445 ACQ	B15	B14	B13	B12	B11	B10	B09	B08	B07	B06	B05	B04	B03	B02	B01	B00
uint	43 - 40044		Version de prog REG445 REG	B15	B14	B13	B12	B11	B10	B09	B08	B07	B06	B05	B04	B03	B02	B01	B00
8bits	44 - 40045		Adresse IP	B07	B06	B05	B04	B03	B02	B01	B00	B07	B06	B05	B04	B03	B02	B01	B00
	45 - 40046			B07	B06	B05	B04	B03	B02	B01	B00	B07	B06	B05	B04	B03	B02	B01	B00

réservé

Modbus exchange table desciption:

Registre	Bit	Description	
40001	0	Power On	Envoi de '1' pour le démarrer la puissance. Le bit revient à '0' lorsque la commande est acquittée.
40001	1	Power Off	Envoi de '1' pour stopper la puissance. Le bit revient à '0' lorsque la commande est acquittée.
40001	2	Reset	Envoi de '1' pour reset les défauts. Le bit revient à '0' lorsque la commande est acquittée.
40001	3	Ramp start	Envoi de '1' pour démarrer la rampe de courant jusqu'à la valeur de la consigne. Le bit revient à '0' lorsque la commande est acquittée.

Data Register	Bit	Description	
40002/40003	-	Rampe de courant	Envoi une valeur pour changer la rampe de courant en Ampère/Seconde.

Data Register	Bit	Description	
40004/40005	-	Fourchette de surveillance	

Data Register	Bit	Description	
40006/40007	-	Consigne de courant	Envoi une valeur pour changer du courant Ampère.

Data Register	Bit	Description	
40008/40009	-	Consigne de tension	Envoi une valeur pour changer de la tension en Volts.

Data Register	Bit	Description	
40010/40011	-	Valeur courant	Mesure du courant

Data Register	Bit	Description	
40012/40013	-	Valeur consigne tension	Consigne de tension

Data Register	Bit	Description	
40014/40015	-	Valeur tension	Mesure du tension

Data Register	Bit	Description	
400016	0	Power On	"1" Indique que la puissance est "ON"
	1	Power Off	"1" Indique que la puissance est "OFF"
	2	Ready	"1" Indique que la puissance est prête à démarrer sans défaut.
	3	Local mode	"1" Indique que le IOCASTE est en mode local.
	4	Remote mode	"1" Indique que le IOCASTE est en mode distant
	7	Global fault	"1" Indique qu'il y a au moins un défaut. Il est néccessaire de faire "reset" pour avoir "0" si il n'y a plus de défaut
	8	Standby	"1" indique que la puissance est prête.
	7	Regulation OK	"1" indique que la puissance est bien régulée.

Data Register	Bit	Description	
40025/40026	-	Butée maximum de courant	Valeur maximum admissible du courant.

Data Register	Bit	Description	
40027/40028	-	Butée minimum de courant	Valeur minimum admissible du courant

Data Register	Bit	Description	
40029/40030	-	variation relation d'impédance	

Data Register	Bit	Description	
40031/40032	-	Valeur du courant maximum	Valeur de courant maximum admissible par le convertisseur

Data Register	Bit	Description	
40033/40034	-	Valeur de la tension maximum	Valeur de tension maximum admissible par le convertisseur

Data Register	Bit	Description	
40035/40036	-	Rampe de courant local	Valeur en mode local de la rampe de courant en Ampère/Seconde.

Data Register	Bit	Description	
40037/40038	-	Code affaire	Code de l'affaire HAZEMEYER

Data Register	Bit	Description	
40039/40040	-	Numéro client	Numéro client

Data Register	Bit	Description	
40042	-	Version de prog MB441	Numéro de révision du programme de la carte mère

Data Register	Bit	Description	
40043	-	Version de prog REG445 ACQ	Numéro de révision du programme du micro-contrôleur de l'acquisition sur la carte REG445

Data Register	Bit	Description	
40044	-	Version de prog REG446 REG	Numéro de révision du programme du micro-contrôleur de la régulation sur la carte REG445

Data Register	Bit	Description	
40045/40046	-	Adresse IP	Adresse IP du IOCASTE(4 fois quatre bits)